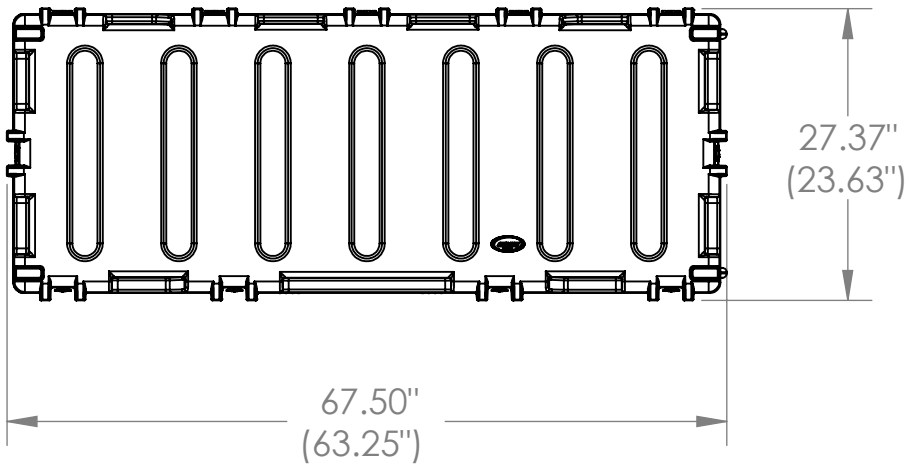

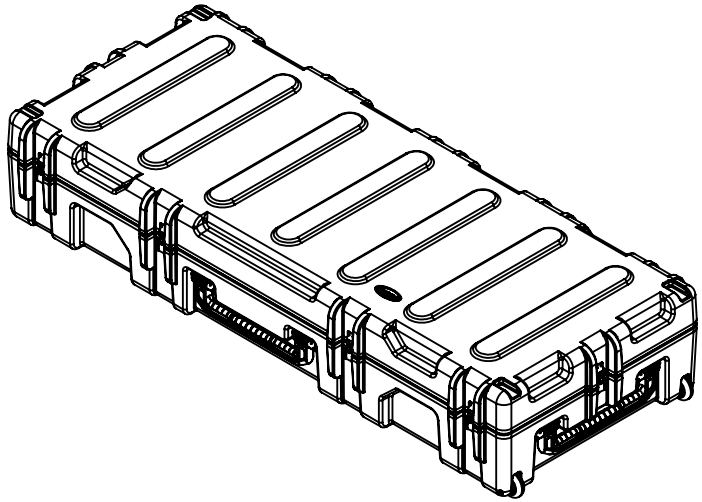

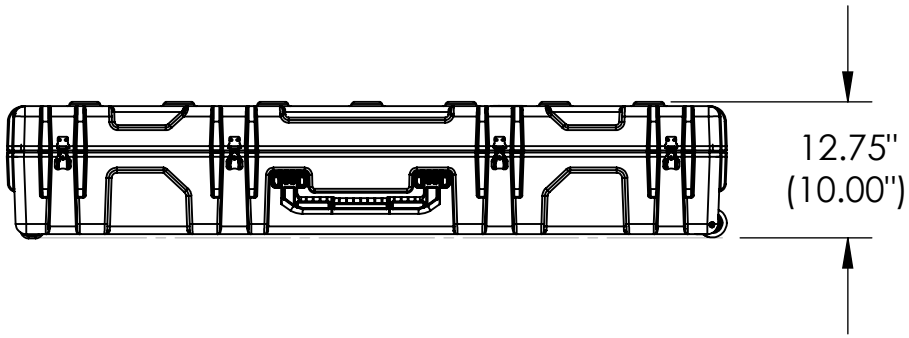

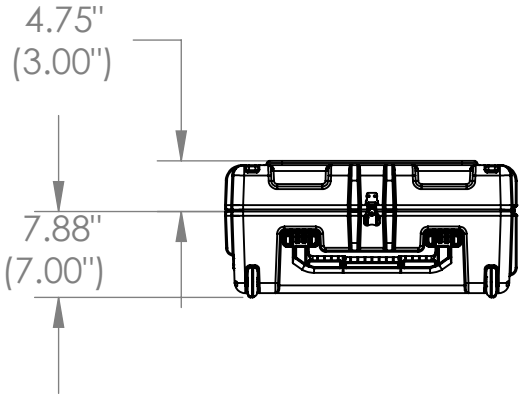

3R6223-10

NOTE: DIMENSIONS IN (X.XX) ARE ID

434 West Levers Place
Orange, CA 92867
Phone: (714) 637-1252
Fax: (714) 637-0491
http://www.skbcases.com

Case Series:	3R Series	Dimensions (for reference only)			
Case part#	3R6223-10		Length	Width	Overall	Base / Lid
			left to right	front to back	height	height
Weight:		Exterior	67.50"	27.37"	12.75"	7.88"-4.75"
		Inerior	63.25"	23.63"	10.00"	7.00"-3.00"

5 4 3 2 1